KH 310 + LH 25 + LH 43

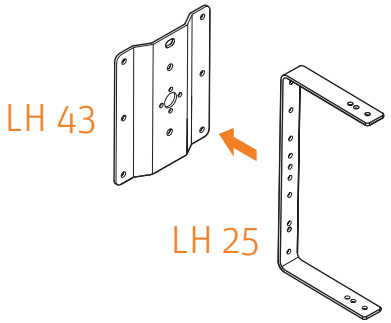

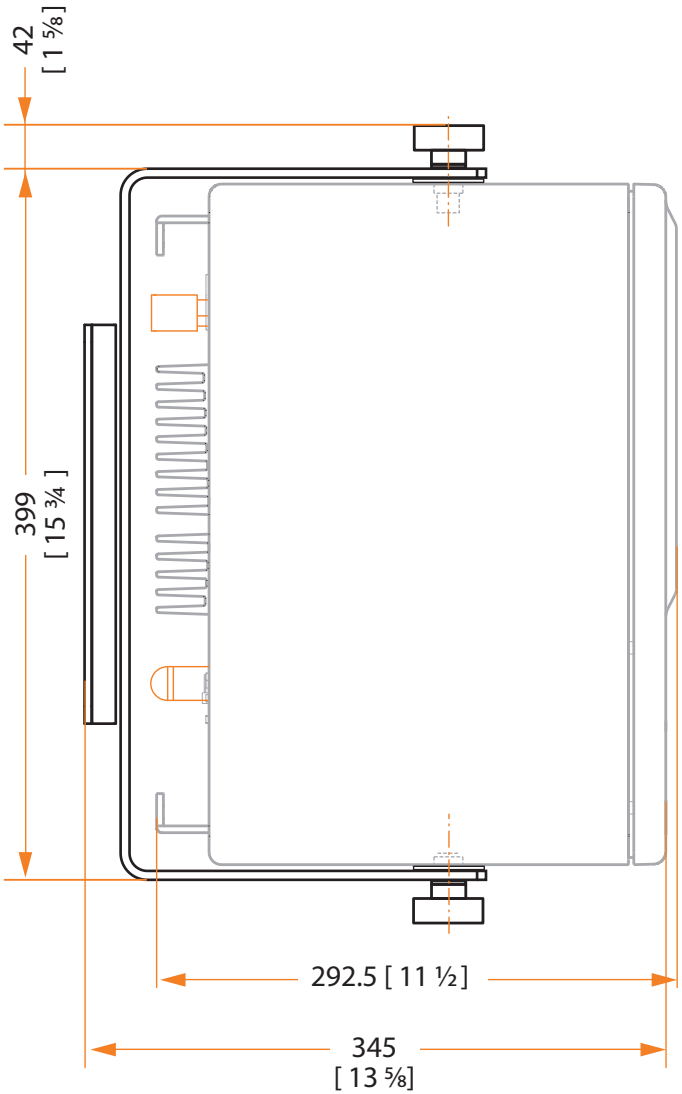

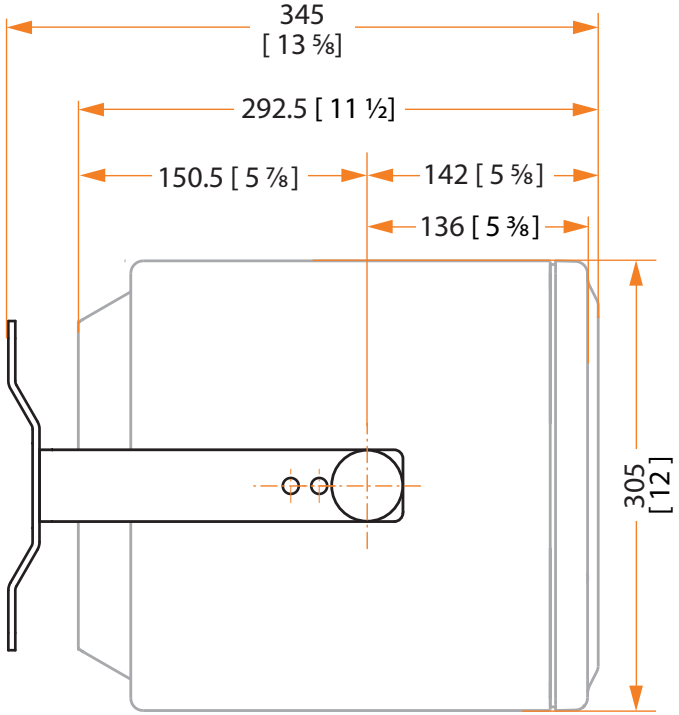

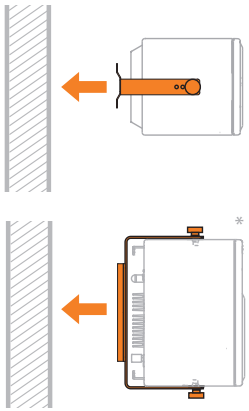

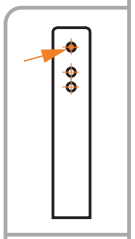

mm
[inch]

* While it is possible to mount the KH 310 vertically as shown here, Neumann recommends that you mount it horizontally whenever possible.

LH 25 bottom position

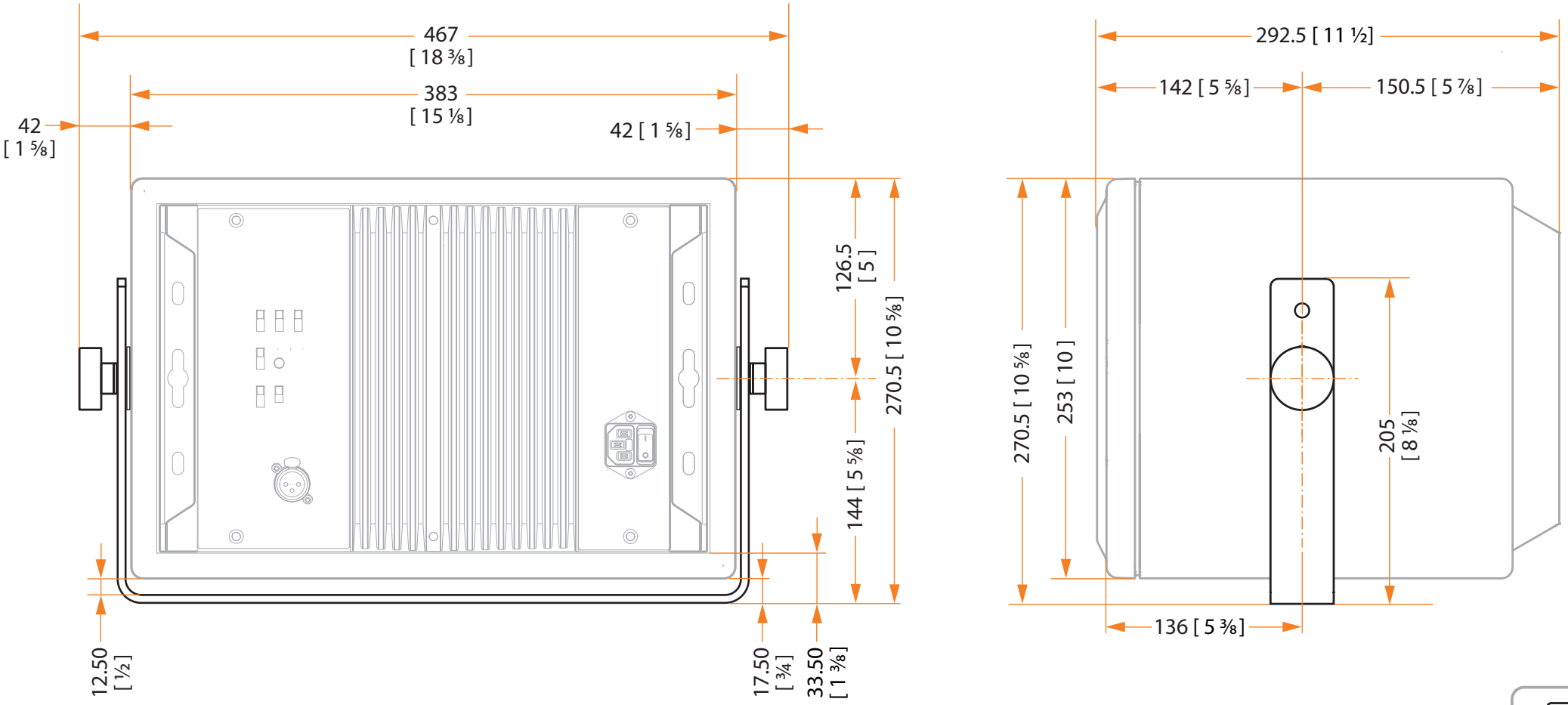

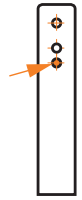

mm
[inch]

LH 25 middle position

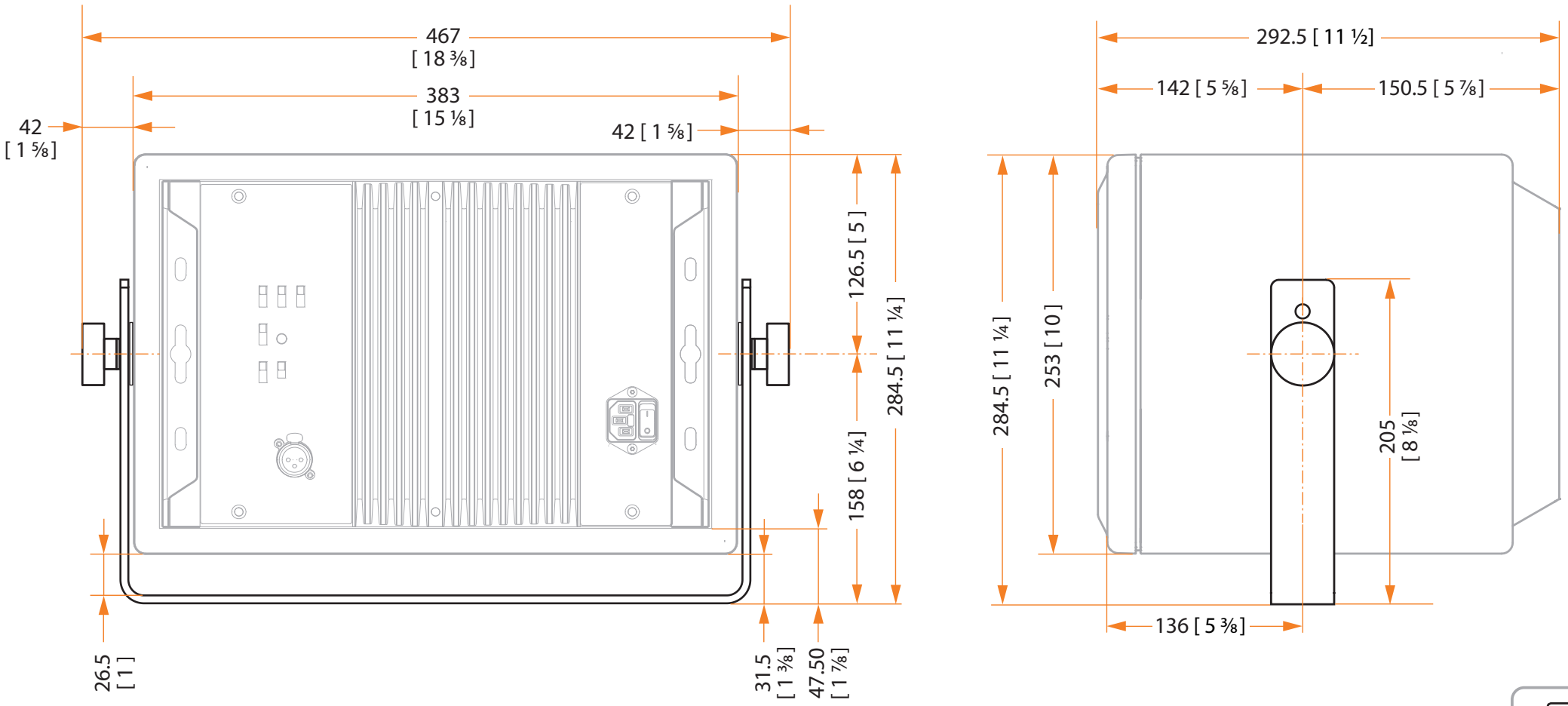

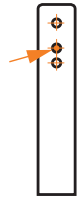

mm
[inch]

LH 25 top position

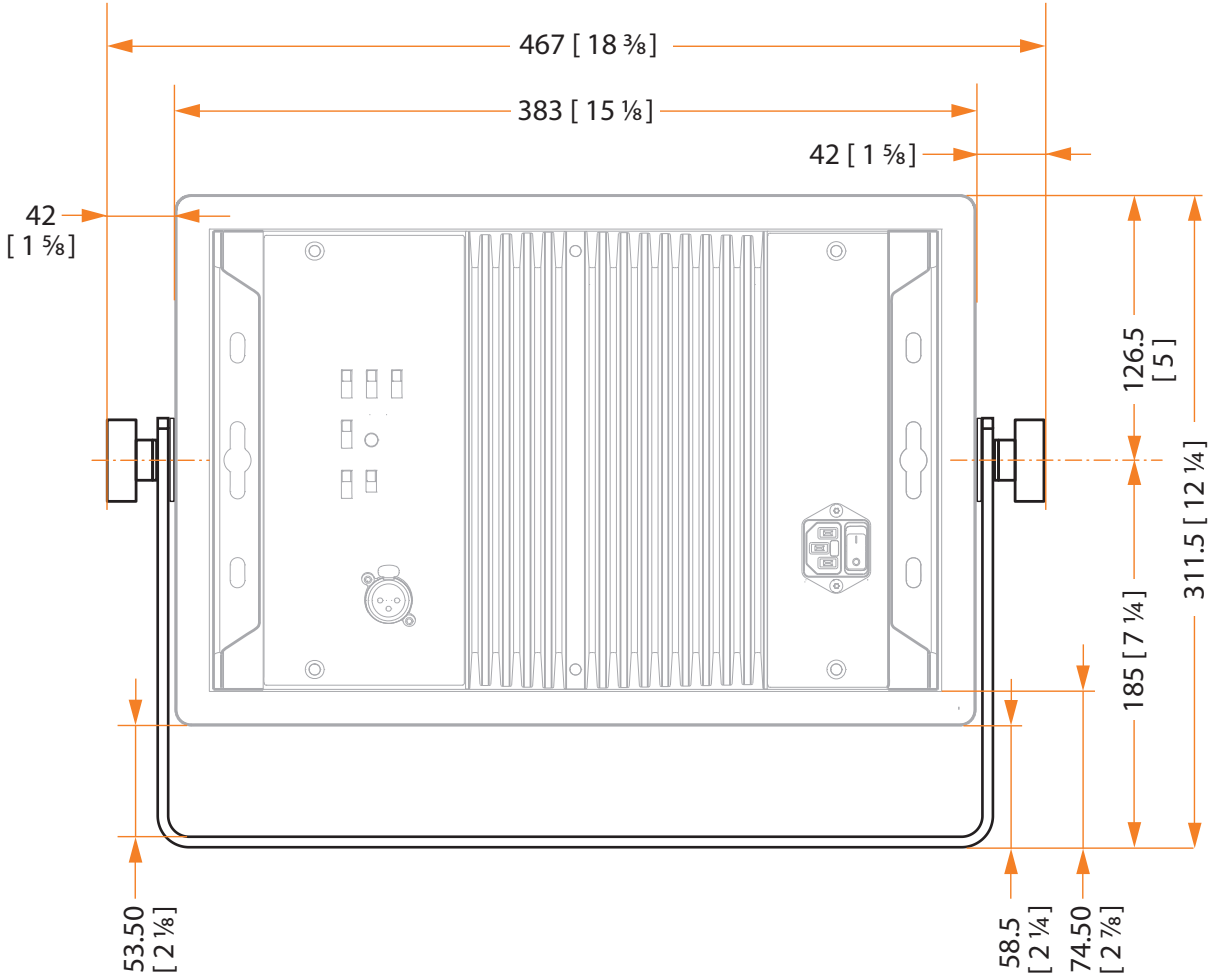

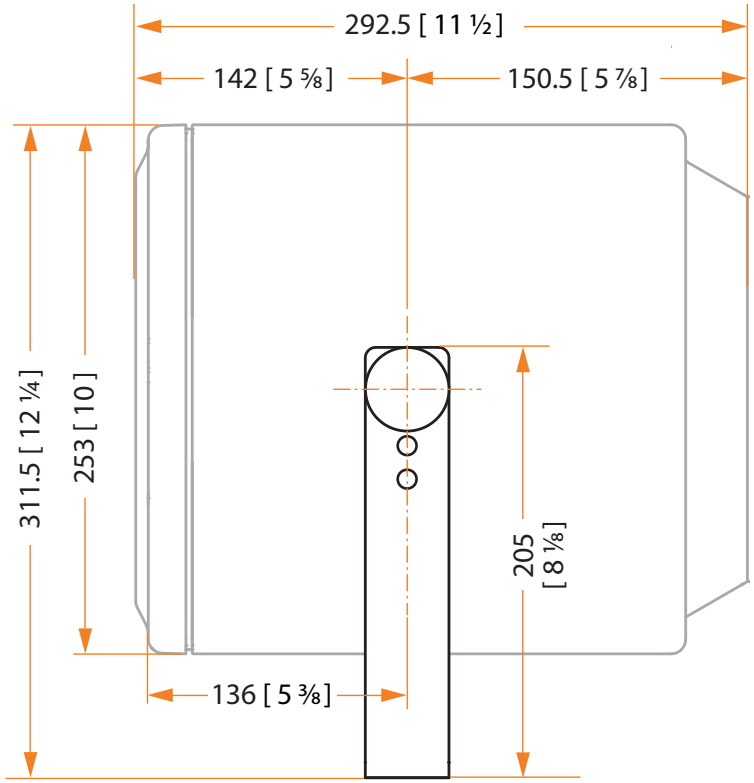

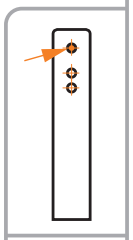

mm
[inch]

LH 25 bottom position

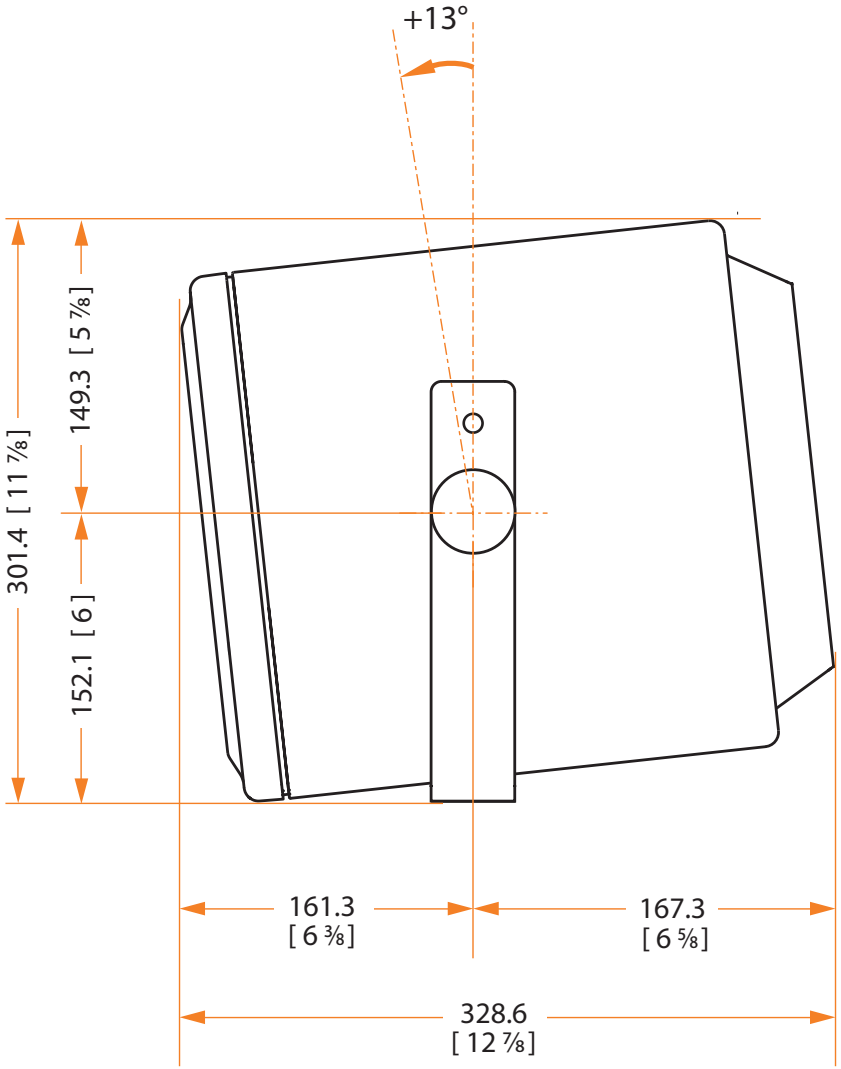

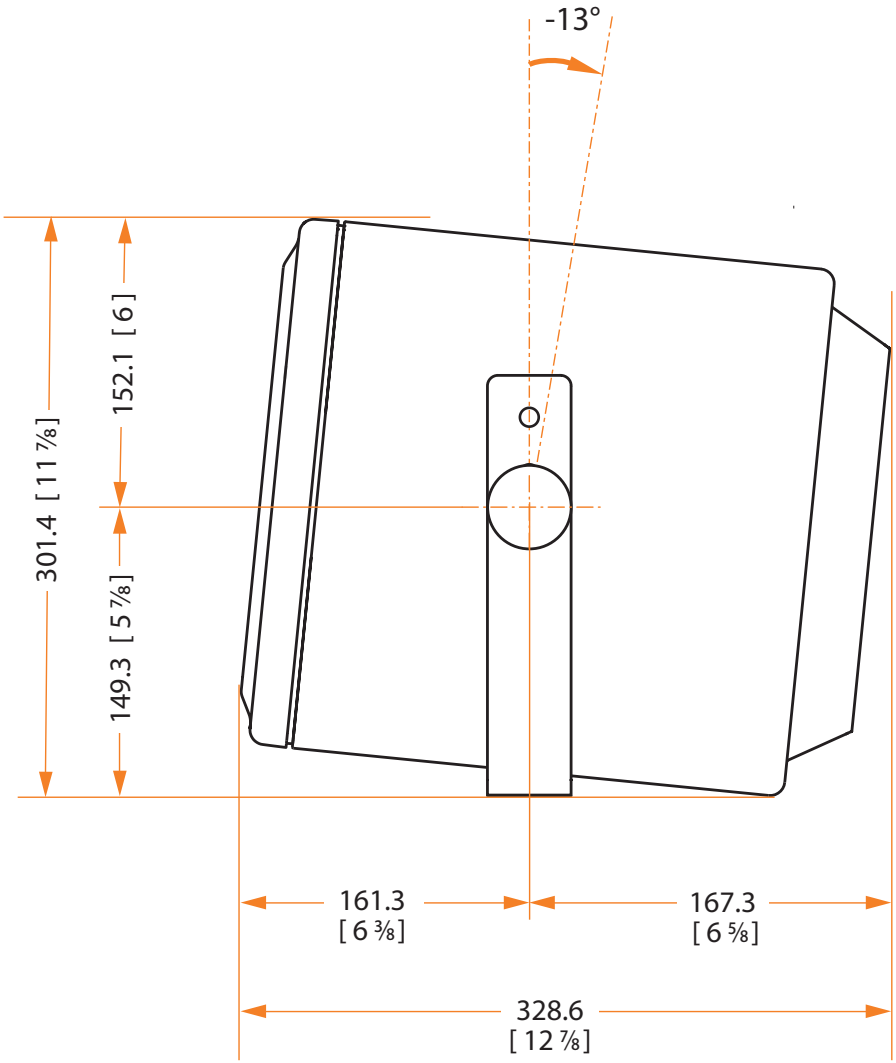

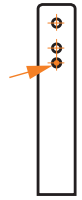

mm
[inch]

LH 25 middle position

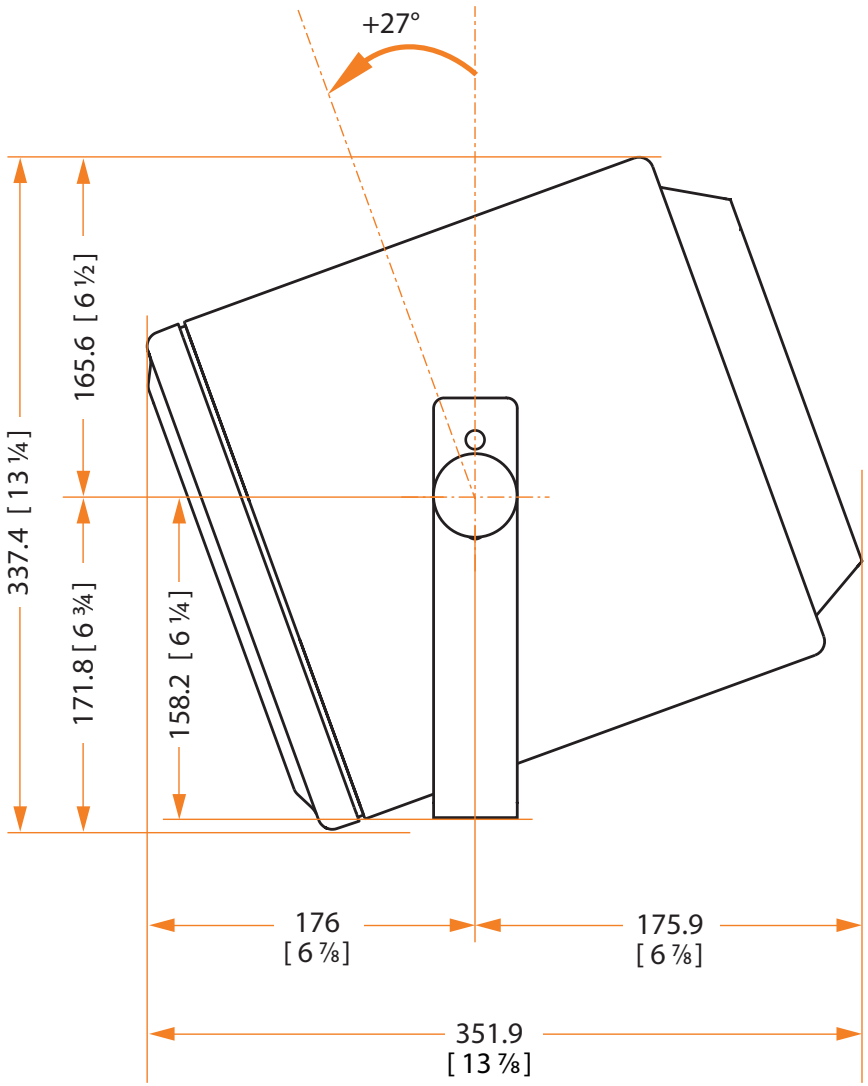

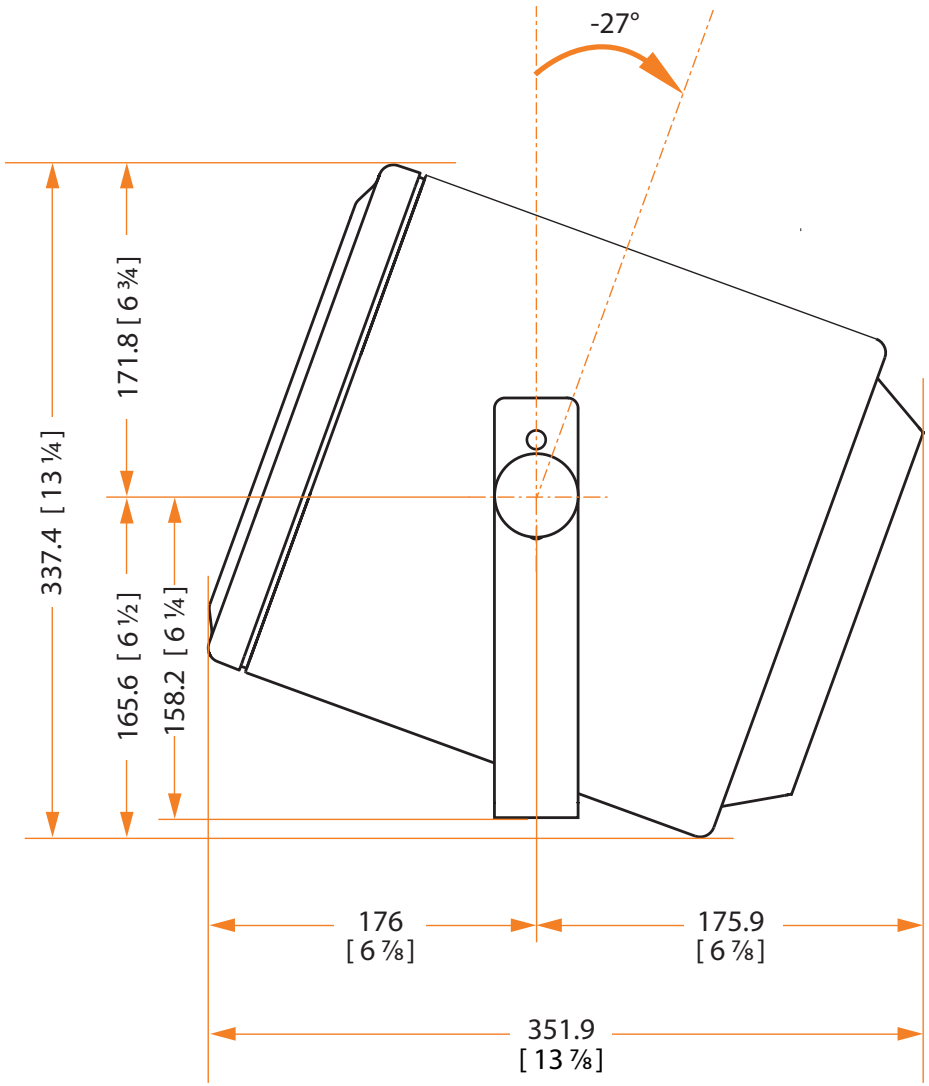

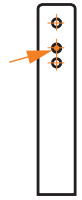

mm
[inch]

LH 25 top position

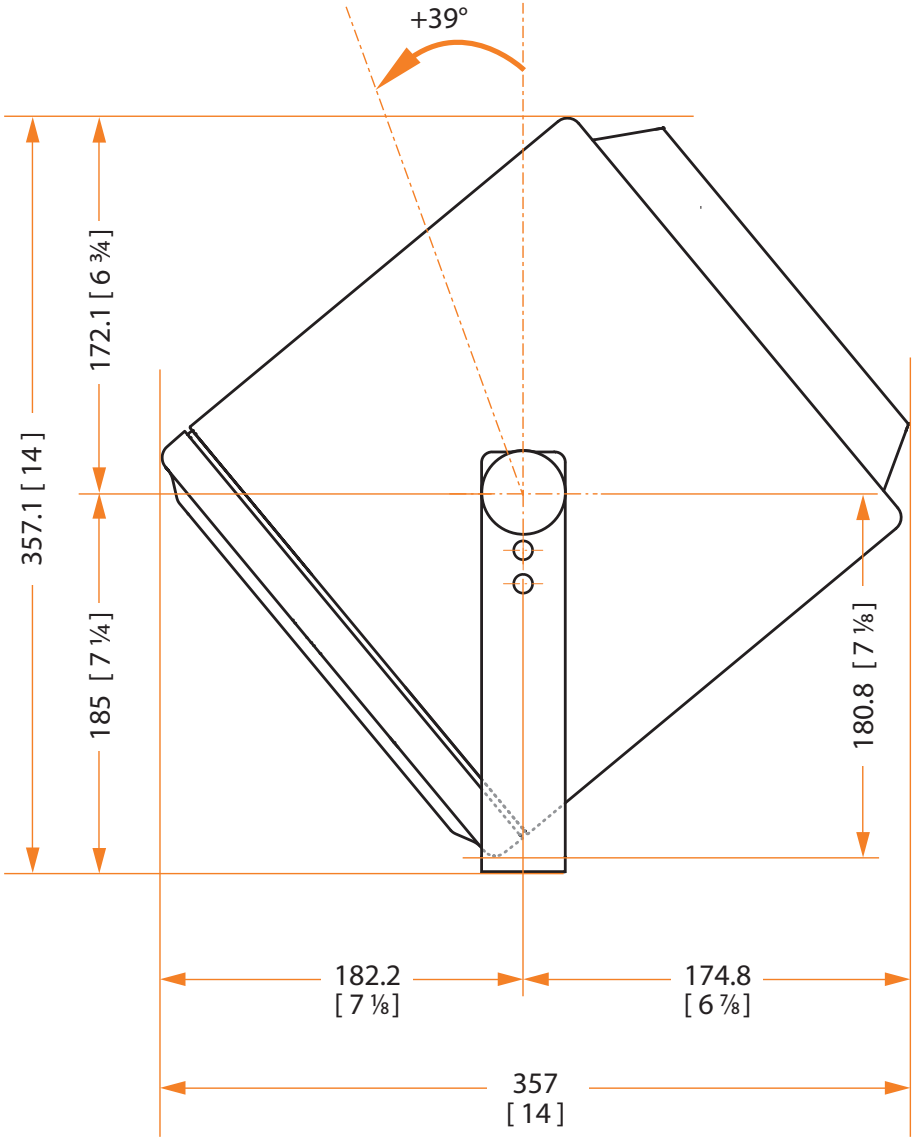

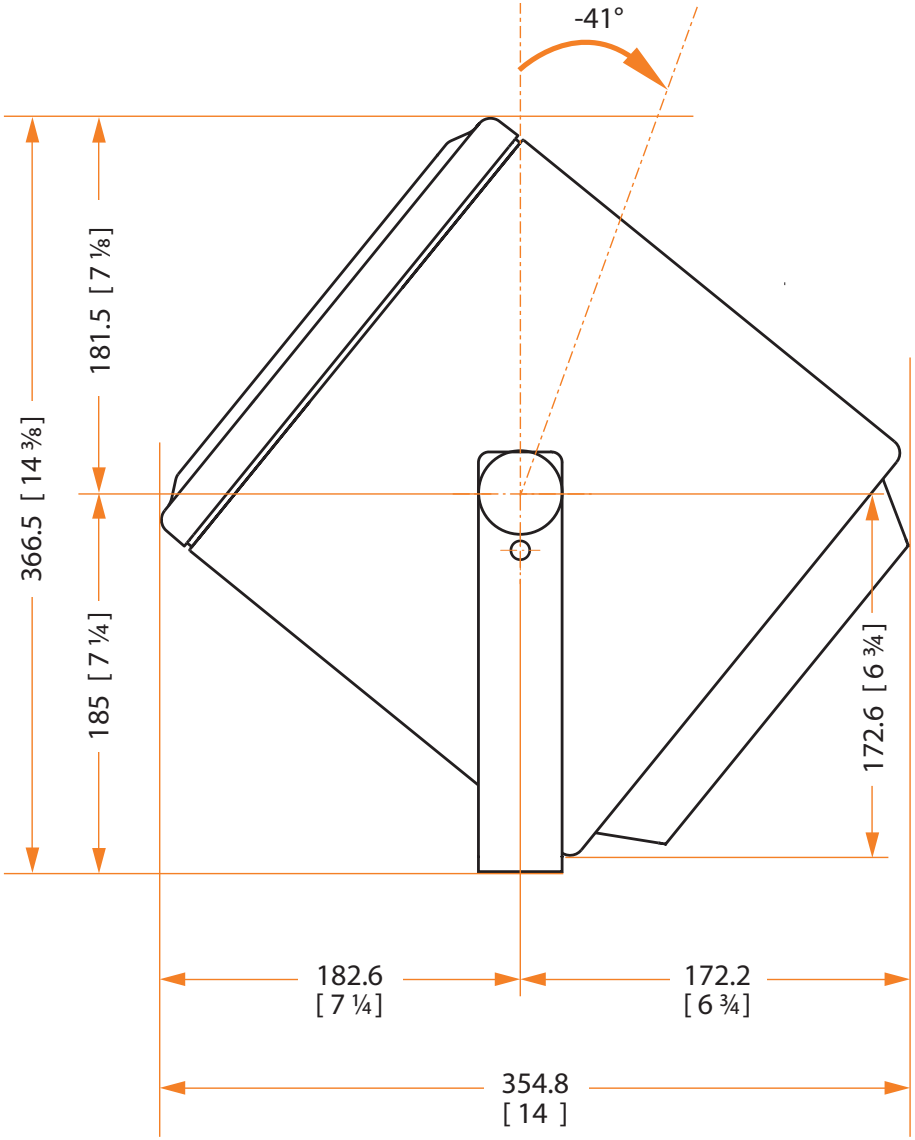

mm
[inch]