NEUMANN.BERLIN

LH 65 + KH 120

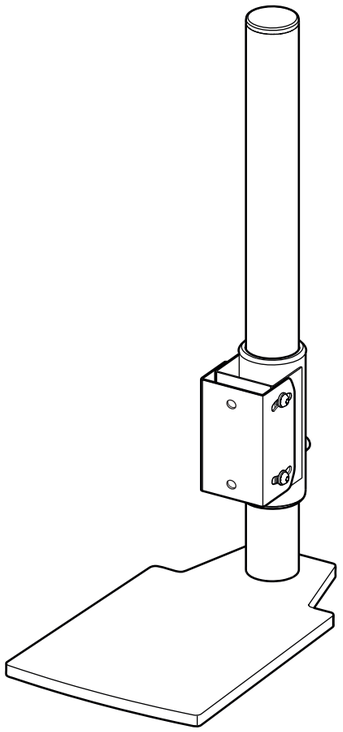

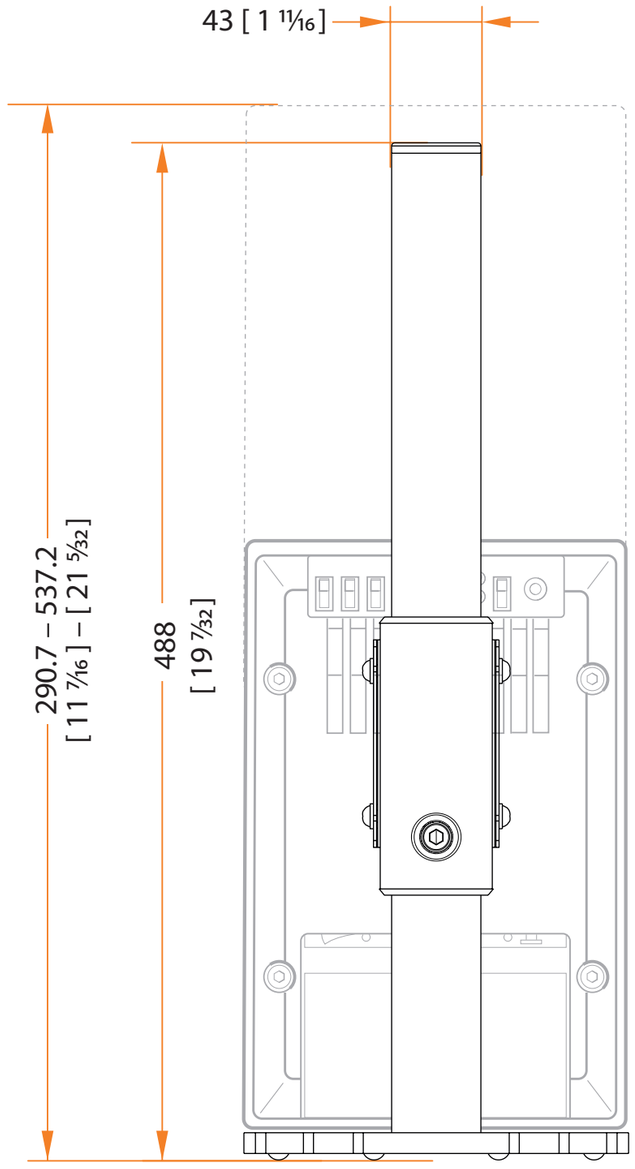

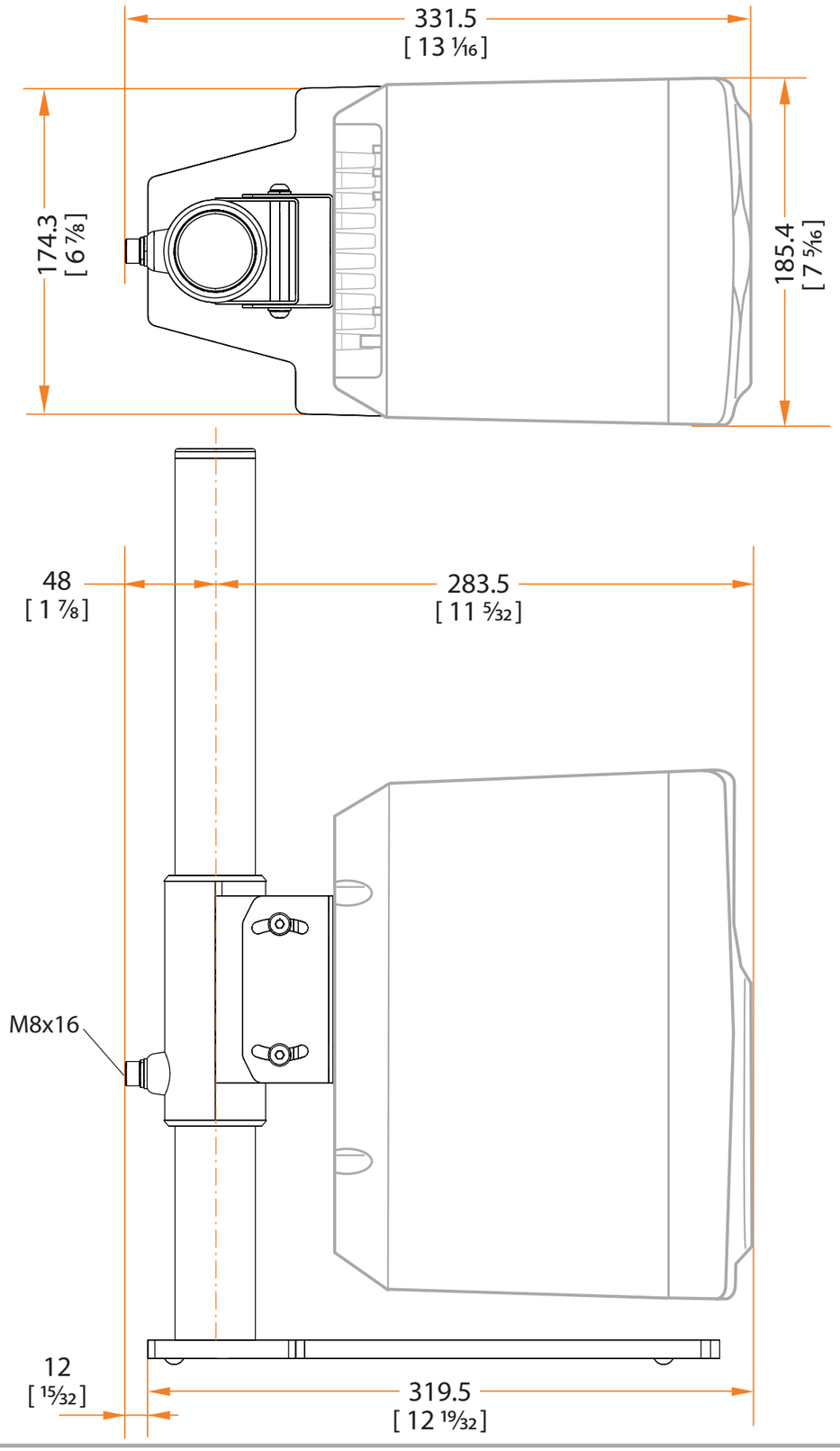

mm
[inch]

LH 65 + KH 120

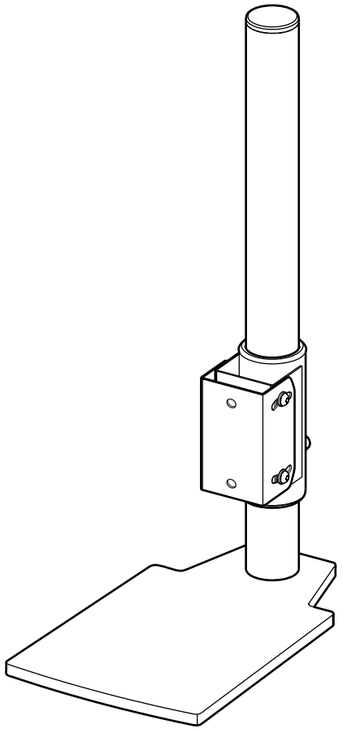

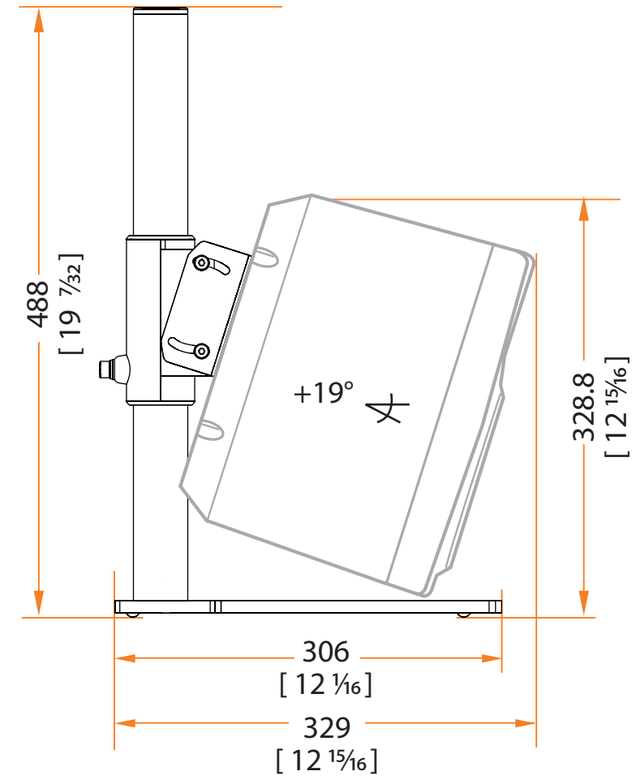

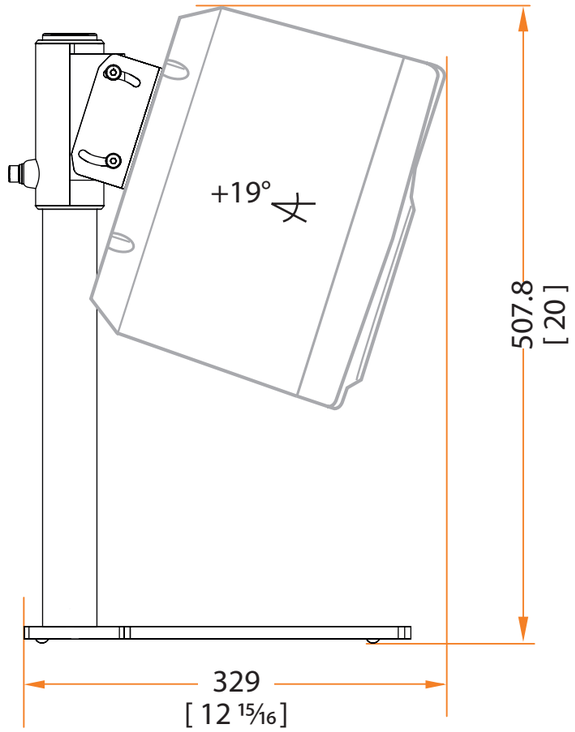

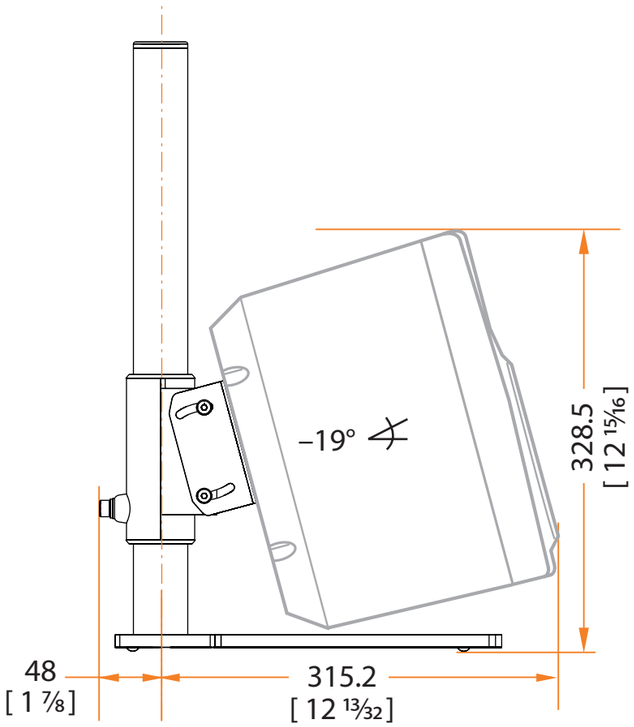

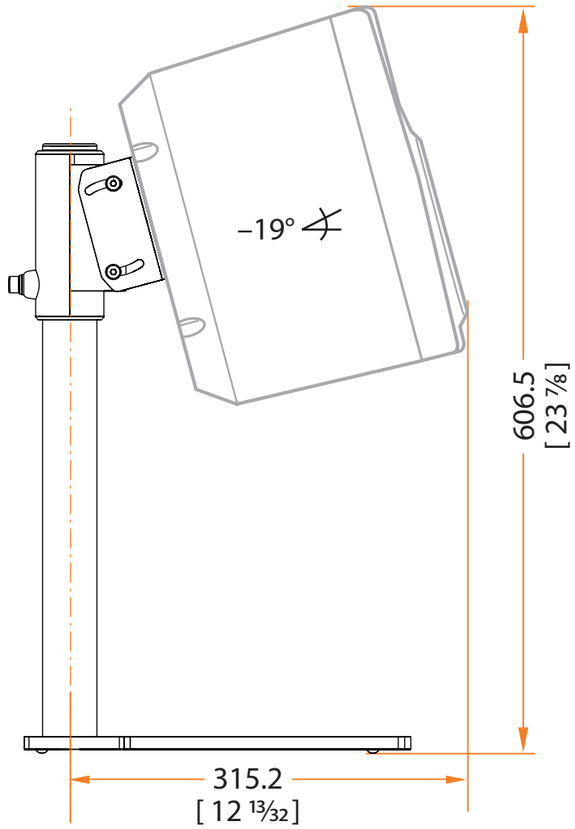

mm
[inch]